DFE
Digital Soft Starters

FAIRFORD ELECTRONICS

Soft Starters and Energy Optimising Soft Starters

Installation Instructions

DFE-02 - DFE-26 Page 2

DFE-30 - DFE-38 Page 14

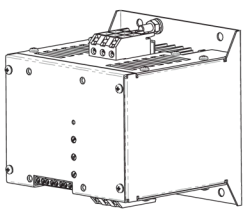

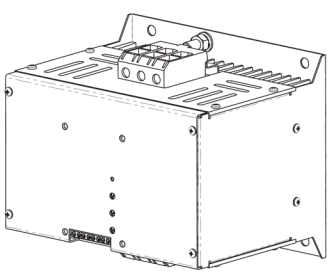

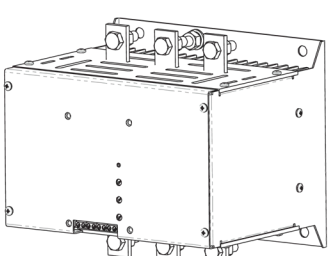

Further information available from the Fairford website www.fairford.co.uk

DFE

Digital Soft Starters

Up to 195Amp

FAIRFORD ELECTRONICS

Soft Starters and Energy Optimising Soft Starters

Installation Instructions
Montageanweisung
Notice d'installation
Istruzioni per il montaggio
Instrucciones de montaje

This device is suitable for use in industrial environments. EN 55011/22 Class A
Das Gerät ist für den industriellen Einsatz geeignet EN 55011/22 Klasse A.
L'appareil a été conçu pour l'emploi en milieu industriel EN 55011/22 classe A.
L'apparecchio è adatto per uso in ambienti industriali EN 55011/22 Classe A.
El aparato es adecuado para uso en ambiente industrial EN 55011/22 clase A.

Electric shock risk. Danger
Only skilled or instructed persons may carry out the following operations.
Lebensgefahr durch elektrischen Strom!
Nur Elektrofachkräfte und elektrotechnisch unterwiesene Personen dürfen die im Folgenden beschriebenen Arbeiten ausführen.
Tension électrique dangereuse !
Seules les personnes qualifées et averties doivent exécuter les travaux ci-après.
Tensione elettrica: Pericolo di morte!
Solo persone abilitate e qualificate possono eseguire le operazioni di seguito riportate.
¡Corriente eléctrica! ¡Peligro de muerte!
El trabajo a continuación descrito debe ser realizado por personas cualificadas y advertidas.

DFE-02	**11kW @ 400V**	**22Amp**
DFE-04	**15kW @ 400V**	**29Amp**
DFE-06	**22kW @ 400V**	**41Amp**
DFE-08	**30kW @ 400V**	**55Amp**

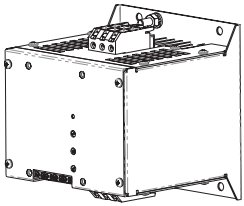

DFE-12	**37kW @ 400V**	**66Amp**
DFE-14	**45kW @ 400V**	**80Amp**
DFE-16	**55kW @ 400V**	**97Amp**

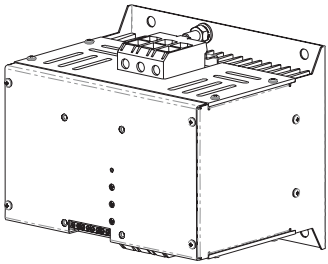

DFE-22	**75kW @ 400V**	**132Amp**
DFE-24	**90kW @ 400V**	**160Amp**
DFE-26	**110kW @ 400V**	**195Amp**

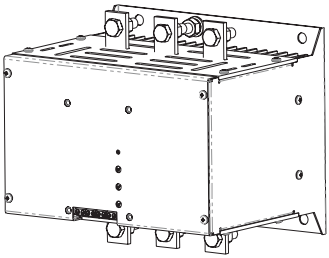

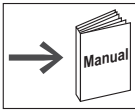

Further information available from the Fairford website www.fairford.co.uk

Dimensions – Abmessungen – Dimensioni – Dimensiones

DFE-02 to DFE-08 11kW to 30kW

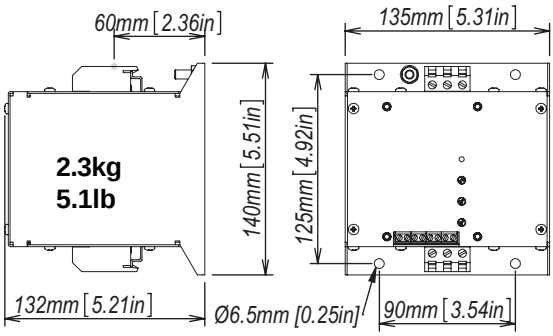

Cu STR 75°C

Mountings suitable for M6
90mm x 125mm centres

Power cables/Leistungsleitungen/Conducteurs de puissance/Cavi di potenza/Conductores de potencia

1L1, 3L2, 5L3 2T1, 4T2, 6T3				
mm^2	AWG	mm	Nm /Lb.in	mm
6 - 16	8 - 4	13	2 /18	0.8 x 4

M6 8 Nm/70Lb in

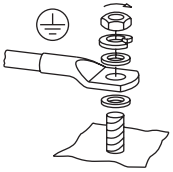

DFE-12 to DFE-16 37kW to 55kW

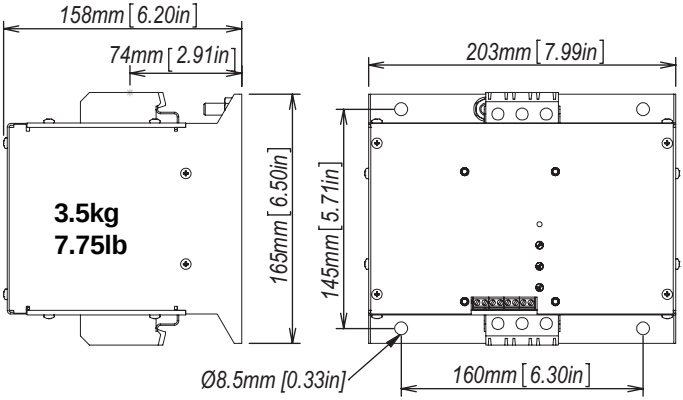

Cu STR 75°C

Mountings suitable for M8.
160mm x 145mm centres

Power cables/Leistungsleitungen/Conducteurs de puissance/Cavi di potenza/Conductores de potencia

1L1, 3L2, 5L3, 2T1, 4T2, 6T3				
mm^2	AWG	mm	Nm/Lb.in	mm
16 -35	6 - 1	17	2.5/27	1.2 x 6.5

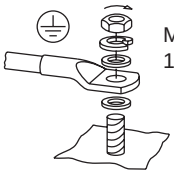

M8 12 Nm/
105 Lb.In

Dimensions – Abmessungen – Dimensioni – Dimensiones

DFE-22 to DFE-26 75kW to 110kW

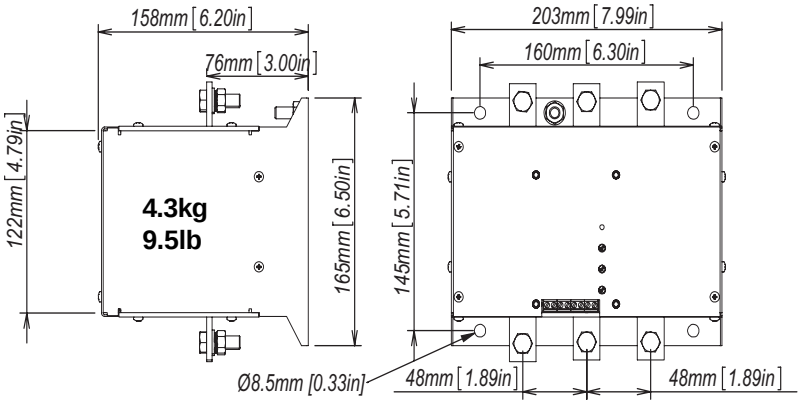

Cu STR 75°C

Power cables/Leistungsleitungen/Conducteurs de puissance/Cavi di potenza/Conductores de potencia

Mountings suitable for M8.
160mm x 145mm centres

Kit installation with Insulation Kit part Number MIS854 is required for UL compliance

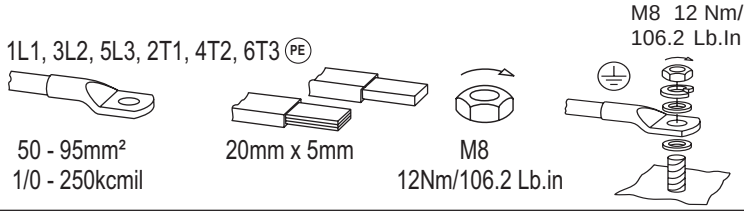

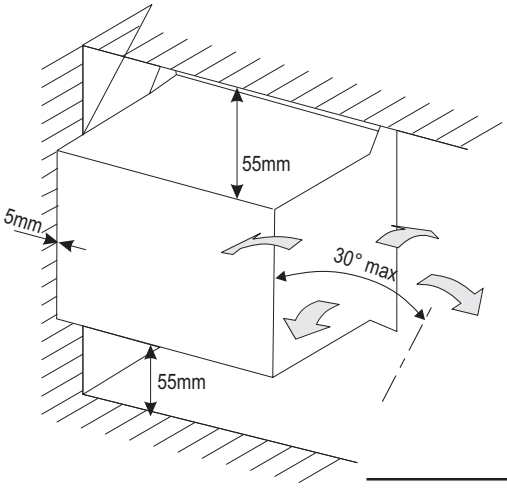

Control cables –Steuerleitungen Conducteurs de commande – Cavi comandi - Conductores de mando

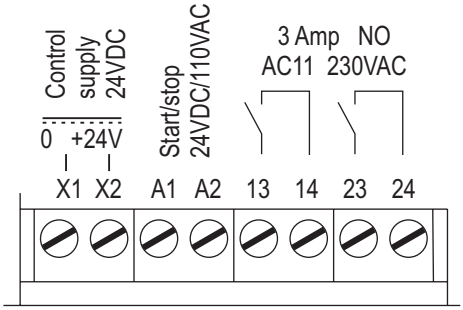

Mounting position - Einbaulage - Position de montage - Posizione di montaggio - Posición de montaje

X1, X2 A1, A2
13, 14 23, 24

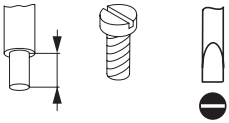

	mm²	AWG	mm	Nm	mm
1 x	0.75 – 2.5	18 – 12	6	0.8	0.5 x 3.5
2 x	0.75 - 1	18 – 16	11	0.8	0.5 x 3.5

Standard connection – Standardanschluss – Raccordement standard – Collegamento standard – Conexión estándar

Soft starter with mains contactor - Softstarter mit Netzschütz – Démarreur progressif avec contacteur réseau – Softstarter con contattore di rete – Arrancador suave con contactor red

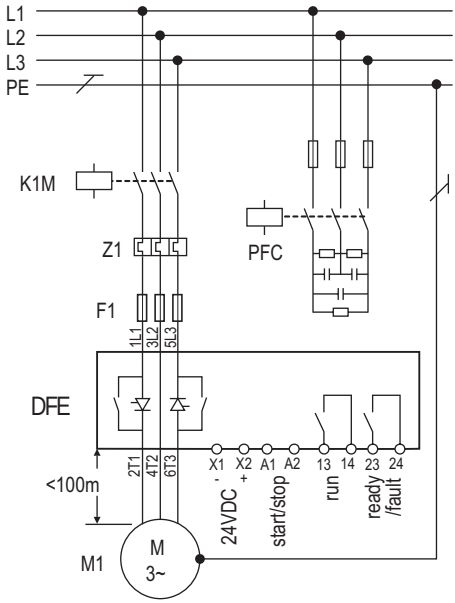

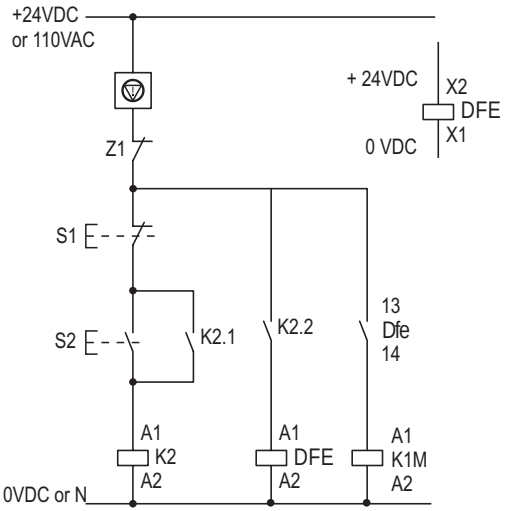

3 wire control 24 VDC/110VAC

Make the Delta at the motor

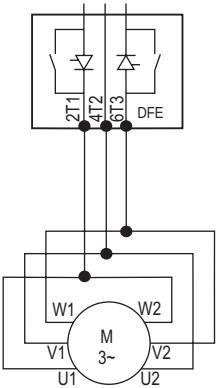

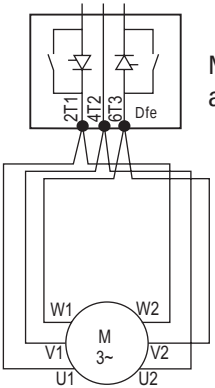

Make the Delta at the DFE

Where several conductors are to be connected, the difference between the wires/ cables used must not exceed one DIN Standard size level.
Bei Mehrleiteranschluss darf maximal ein DIN-Normgrößen-Sprung zwischen den verwendeten Leitern liegen.
En cas de raccordement de plusieurs conducteurs, il faut 1 écartement normalisé max. entre les conducteurs.
In caso di collegamento a più conduttori, è ammesso al massimo un salto di grandezze DIN standard fra i conduttori utilizzati.
En caso de conexión de múltiples conductores puede haber como máximo un salto de magnitud normalizada DIN entre los conductores utilizados.

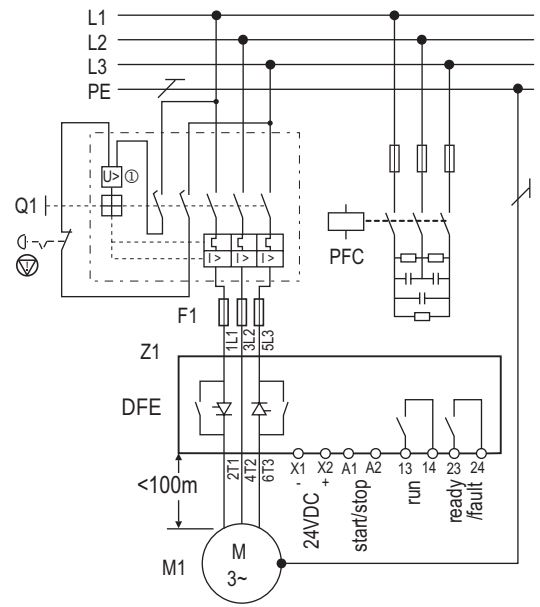

ET Undervoltage release with early-make auxiliary contact - Unterspannungsauslöser mit voreilendem Hilfsschalter - Déclencheur à manque de tension avec contact auxiliaire à action avancée - Sganciatore di minima tensione con contatto ausiliario anticipato - Disparador de baja tensión con interruptor auxiliar adelantado

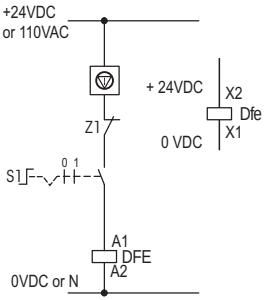

2 wire control element
24 Volt within cabinet,110 Volt external

Q1 = Cable protection - Leitungsschutz - Protezione di linea - Protección de cable - Protection de câbles

K1M = Main contactor - Netzschütz - Contattore di rete - Contactor red - Contacteur réseau

Z1 = Overload relay - Überlastrelais - Relè termico - Relé de sobrecarga - Relais thermique

F1 = Semiconductor fuse for type 1 coordination, in addition to Q1 - Halbleitersicherung für Zuordnungsart 1, zusätzlich zu Q1 - Per avere la protezione del semiconduttore in coordinamento di tipo 1, è necessario un fusibile in aggiunta a Q1 - Fusible semiconductor para tipo de coordinación 1, adicionalmente a Q1 - Fusible pour semi-conducteurs pour coordination de type 1, additionnel à Q1

Dfe = Soft Starter - Halbleiterschütz - Contactor semiconductor - Contattore a semiconduttori - Contacteur à semi-conducteurs

A1-A2 = Start/Stop - Start/Stopp - Start/Stop - Arranque/Parada - Démarrage/Arrêt

⊗ = EMERGENCY-STOP - NOT-AUS - ARRESTO D'EMERGENZA - PARADA DE EMERGENCIA - ARRET D'URGENCE

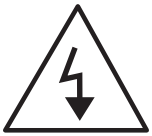

SERVICING

WARNING NEVER CARRY OUT ANY WORK ON ELECTRICAL OR MECHANICAL EQUIPMENT BEFORE ISOLATING ALL POWER SUPPLIES.THE DFE DOES NOT PROVIDE ISOLATION.
LIVE OUTPUTS MAY BE PRESENT WITHOUT MOTOR ROTATION

Settings - Einstellungen - Réglages - Regulazioni - Regulaciones

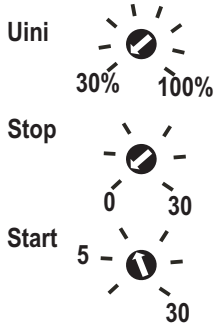

Pedestal Voltage:- 30% for standard rating
100% for high breakaway loads

Soft Stop time:- 0 = default range 0 S to 30 S

Soft Start time:- ~5 = default range 1S to 30S

	Green
On	Ready
Off	Fault
Flash Red (fault)	
1	SCR / supply
2	Thermal
3	Uc < 24V
4	Bypass relay failure

☺ **LED green - LED grün – DEL vert – LED verde - LED verde**

On Ready for operation – Betriebsbereit – Prêt à fonctionner – Pronto al funzionamento – En condiciones para funcionamiento

Off Fault – Fehler – erreur – errore – error

☹ **Fault LED red – Fehler LED rot – DEL erreur rouge – LED errore rosso –LED error rojo**

flashes

1 SCR or supply
2 Too hot
3 Control supply low volts
4 Bypass relay failure

Green/Orange Flash Tripped & Reset, Ready

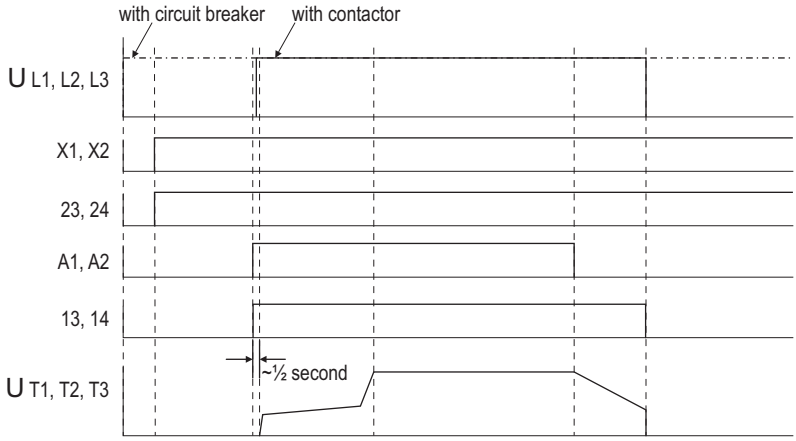

Attention!

Within the scope of the EU Directives, the DFE soft starters and their accessories may be commissioned only provided it is established that the machine fulfils the protective requirements of Machine Directive 89/392/EWG.

Achtung!

Im Geltungsbereich der EG-Richtlinien dürfen die Softstarter der Reihe DFE und deren Zubehör nur dann in Betrieb genommen werden, wenn festgestellt wird, dass die Maschine die Schutzanforderungen der Maschinenrichtlinie 89/392/EWG erfüllt.

¡Atención!

En el campo de aplicación de la normativa CE, los arrancadores suaves de la serie DFE y sus correspondientes accesorios sólo deberán ponerse en marcha cuando se asegure que la máquina cumple con las exigencias de seguridad de la normativa de máquinas 89/392/CE.

Attention !

En application des directives européennes, les démarreurs progressifs de la gamme DFE et leurs accessoires ne doivent être mis en service que s'il a été vérifié que la machine répond bien aux exigences de la directive machines 89/392/EWG.

Attenzione!

Nel campo di validità delle direttive CEE i softstarter della serie DFE e i loro accessori possono essere messi in esercizio solamente se è verificato che la macchina soddisfai requisiti di sicurezza delle direttive macchine 89/392/CEE.

Sizing Guide

The DFE is designed for general purpose applications and where a traditional Star / Delta is currently used, or would be considered to be appropriate. Generally the motor will start off load, and the time to accelerate to full speed will be in the region of a few seconds.

The standard DFE range is suitable for the majority of cases, and conforms to Trip Class5, which means it is capable of withstanding 3 times Full Load Current for 5 second starts. However there are instances where a different start is required and to satisfy this situation the DFE has four further ratings, Class 10B, Class 10, Class 20 and Class30. These ratings correspond to IEC thermal / electronic overload trip classes, and the DFE must be used with an over current protection device that has a rating corresponding to the Trip Class selected.

When using the following tables to select the most appropriate model of DFE please note

- **The DFE is not suitable for very high inertia loads such as centrifuges or loaded crushers with starts > 30 seconds (Fairford has other ranges of Soft Starter for these applications)**

- **Do not use the Class 5 rating when there is possibility of the motor starting with a significant load.**

- **2-pole motors may take longer to start, use a minimum of Trip Class 10B.**

Common applications, used as a guide to determine appropriate Trip Class.

Application	Trip Class	Start Time (s)	Notes
Standard	5	5	Suitable for Star / Delta applications with < 5 s Star time, motor starts off load
Heavy	10B	12	Suitable for Star / Delta with applications < 12 s Star time
High Torque	20	12	Requires more starting torque than a Star / Delta
Centrifugal Pump	10	10	Generally easy to start when pumping water
Positive displacement Pump	10	12	Can be difficult to start
Off load Conveyor	5	5	Unloaded at start
Heavy conveyor	20	12	Loaded at start
High inertia fan	10	23	Generally fans greater or equal to 45KW
Off load Compressor	5	5	Special circuits ensure motor starts off load
Loaded Compressor	10	12	Some compressor systems can be difficult to start
Off load Mixer	5	5	No material in basin, off load
Heavy Mixer	20	12	Material in basin

Trip Class table

Ie (A) 400V	Inline KW 400V	Inline HP 460V	Trip Class 5 3-5: 355 (Standard)	Trip Class 10B 3.5-12: 708 5/Hr	Trip Class 10 3-23: 697 (5/Hr)	Trip Class 20 4-19: 701 (5/Hr)	Trip Class 30 4-29: 691 (5/Hr)
22 A	11 KW	15 HP	DFE-02	DFE-04	DFE-04	DFE-04	DFE-06
29 A	15 KW	20 HP	DFE-04	DFE-06	DFE-06	DFE-06	DFE-08
41 A	22 KW	30 HP	DFE-06	DFE-08	DFE-08	DFE-12	DFE-16
55 A	30 KW	40 HP	DFE-08	DFE-12	DFE-12	DFE-16	DFE-22
66 A	37 KW	50 HP	DFE-12	DFE-14	DFE-14	DFE-22	DFE-22
80 A	45 KW	60 HP	DFE-14	DFE-22	DFE-22	DFE-22	DFE-24
97 A	55 KW	75 HP	DFE-16	DFE-22	DFE-22	DFE-24	DFE-26
132 A	75 KW	100 HP	DFE-22	DFE-26	DFE-26	*DFE-30*	*DFE-32*
160 A	90 KW	125 HP	DFE-24	*DFE-30*	*DFE-30*	*DFE-32*	*DFE-34*
195 A	110 KW	150 HP	DFE-26	*DFE-30*	*DFE-30*	*DFE-34*	*DFE-36*

* The basic guide for the DFE-30 to DFE-38 is available as part No. M-7A87-F .

Rated Impulse withstand Voltage (Uimp)	4kV
Rated Insulation Voltage (Ui)	500V
Pollution Degree 2	For use in a Pollution Degree 2 environment
Rated Short Circuit Current (Iq)	5 kA for DFE02 to 08 10 kA for DFE12 to 26
Short Circuit Co-ordination*	Type 1
Surrounding Air Temperature	0°C to 40°C. Above 40°C de-rate linearly by 2% of unit FLC per °C to a derate of 40% at 60°C (not UL) - See requirements on page 12
Transport and Storage	-25°C to +60°C
Altitude	1000m. Above 1000m de-rate linearly by 1% of unit FLC per 100m to a max. altitude of 2000m.
Humidity	max. 85% non-condensing, not exceeding 50% at 40°C
IP Rating	IP20 or IP00

Design Standards
IEC 60947-4-2;
EN60947-4-2 “AC Semiconductor Motor Controllers and Starters”
* When protected by recommended semiconductor fuse.
UL508 Industrial Control Equipment - see UL requirements on page 12

EMC EMISSION AND IMMUNITY LEVELS		
ESD immunity	IEC 61000-4-2	4kV contact. 8kV air discharge
R F immunity	IEC 61000-4-6	140dBuV over 0.15-80MHz
R F immunity	EC 61000-4-3	10V/m over 80 -1000MHz
Fast Transient immunity	IEC 61000-4-4	2kV/5kHz
Surge immunity	IEC 61000-4-5	2kV line to ground 1kV line to line
Conducted RF emissions	EN 55011	Class A
Radiated RF emissions	EN 55011	Class A

Operational Voltage (Ue) 230-460 VAC rms 3-Phase (-15% +10%)
Rated Frequency 50 - 60Hz +/- 2Hz **Form Designation** Form 1
Index Rating Standard AC53b: 3-5: 355 (10 Starts/Hr)
Control Supply 24V DC supplied externally to terminals X1-X2.
Residual Ripple 100mV Spikes/Switching Peaks 240mV
Turn On/Off Response no overshoot of Vout
Over Voltage Protection Output voltage must be clamped to < 30V

DFE-02 to DFE-16 - approx 4VA per starter.
Power supply for up to 3 starters available as part No. APSU005
DFE-22 to DFE-26 - approx 12VA per starter, must be capable of 4 Amps for 250ms.
Power supply for single starter available as part No. APSU006

Start/Soft Stop Control 24V DC/110V AC galvanically isolated terminals A1-A2
Auxiliary Circuits (relays) Run - 13/14, Ready - 23/24. 230VAC 3A, AC11.
Indication Multi function LED on front panel
Start Time 1 to 30 seconds.
Stop Times 0 to 30 seconds
Start Duty 3 x FLC for 5 seconds at standard rating
Starts / Hour 10 starts per hour or 5 starts + 5 soft stops per hour

Power Terminals Input - 1/L1, 3/L2 & 5/L3 output - 2/T1, 4/T2 6/T3.
Up to 55kW (97Amp) Wire clamp terminals (unit is IP20)
75kW to 110kW (132Amp to 197Amp) External busbars (unit is IP00)

Earth Terminal External stud Up to 30kW/55Amp M6
37kW/66A to 110kW/195Amp M8

Model Name 400/460V Range	Class 5 (Standard Rating) 3x FLC for 5 seconds 10 starts per Hr		Class 10B 3.5 x FLC for 12 seconds 10 starts per Hr		Siba semiconductor Fuse for Type 1 coordination short circuit protection
	Ie (Arms)	Motor kW at 400V	Ie (Arms)	Motor kW at 400V	
DFE-02	22A	11kW	15.5A	7.5kW	2018920.50A
DFE-04	29A	15kW	22A	11kW	2018920.100A
DFE-06	41A	22kW	29A	15kW	
DFE-08	55A	30kW	41A	22kW	2018920.125A
DFE-12	66A	37kW	55A	30kW	
DFE-14	80A	45kW	66A	37kW	2061032.200A
DFE-16	97A	55kW	66A	37kW	
DFE-22	132A	75kW	97A	55kW	2061032.250A
DFE-24	160A	90kW	116A	60kW	2061032.400A
DFE-26	195A	110kW	160A	90kW	

UL ratings and protection requirements

Maximum surrounding air temperatures

Model 480V rated	Maximum 40°C		Maximum 50°C	
	Input current	Power	Input current	Power
DFE-02	22A	15hp	20A	10hp
DFE-04	29A	20hp	27A	20hp
DFE-06	41A	30hp	37A	25hp
DFE-08	55A	40hp	45A	30hp
DFE-12	66A	50hp	60A	40hp
DFE-14	80A	60hp	72A	50hp
DFE-16	97A	75hp	78A	60hp
DFE-22	132A	100hp	119A	75hp
DFE-24	160A	125hp	144A	100hp
DFE-26	195A	150hp	176A	125hp

Short circuit protection

Suitable for use on a circuit capable of delivering not more than the rms symmetrical amperes indicated below, 480 Volts ac maximum, when protected by fuses or Inverse time circuit breakers, rated maximum amperes as indicated below.

Model	Short circuit rating	RK5 time delay fuse rated 600V ac	Circuit Breaker rated 600V ac
DFE-02	5kA	35A	-
DFE-04	5kA	45A	-
DFE-06	5kA	60A	-
DFE-08	5kA	80A	-
DFE-12	10kA	125A	-
DFE-14	10kA	175A	-
DFE-16	10kA	200A	-
DFE-22	10kA	250A	350A
DFE-24	10kA	350A	450A
DFE-26	10kA	400A	500A

Fairford Electronics Limited,

Bristow House, Gillard Way, Lee Mill Industrial Estate, Ivybridge, Devon PL21 9GG, UK

TEL: + 44 (0) 1752 894554 *FAX: + 44 (0) 1752 897145*

EMAIL: sales@fairford.co.uk *WEB: www.fairford.co.uk*

Copyright © Fairford Electronics Ltd 2011

DFE

Digital Soft Starters

230Amp to 500Amp

FAIRFORD ELECTRONICS

Soft Starters and Energy Optimising Soft Starters

Installation Instructions
Montageanweisung
Notice d'installation
Istruzioni per il montaggio
Instrucciones de montaje

This device is suitable for use in industrial environments. EN 55011/22 Class A
Das Gerät ist für den industriellen Einsatz geeignet EN 55011/22 Klasse A.
L'appareil a été conçu pour l'emploi en milieu industriel EN 55011/22 classe A.
L'apparecchio è adatto per uso in ambienti industriali EN 55011/22 Classe A.
El aparato es adecuado para uso en ambiente industrial EN 55011/22 clase A.

Electric shock risk. Danger
Only skilled or instructed persons may carry out the following operations.
Lebensgefahr durch elektrischen Strom!
Nur Elektrofachkräfte und elektrotechnisch unterwiesene Personen dürfen die im Folgenden beschriebenen Arbeiten ausführen.
Tension électrique dangereuse !
Seules les personnes qualifées et averties doivent exécuter les travaux ci-après.
Tensione elettrica: Pericolo di morte!
Solo persone abilitate e qualificate possono eseguire le operazioni di seguito riportate.
¡Corriente eléctrica! ¡Peligro de muerte!
El trabajo a continuación descrito debe ser realizado por personas cualificadas y advertidas.

DFE-30	**132kW @ 400V**	**230Amp**
DFE-32	**160kW @ 400V**	**280Amp**
DFE-34	**200kW @ 400V**	**350Amp**
DFE-36	**250kW @ 400V**	**430Amp**
DFE-38	**280kW @ 400V**	**500Amp**

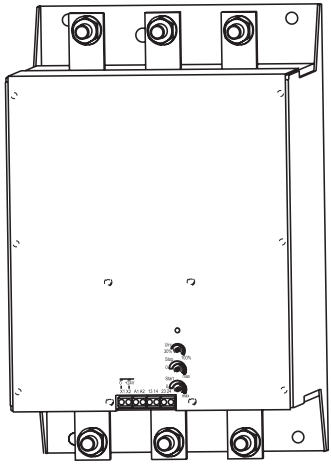

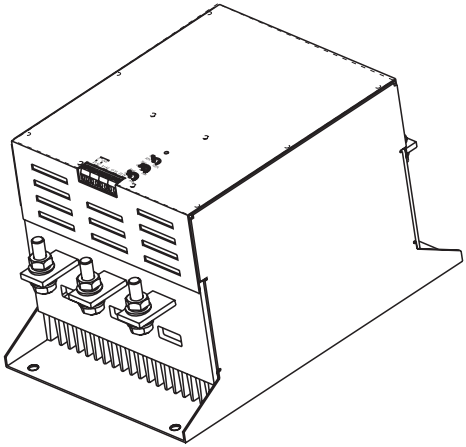

The DFE is also available in smaller sizes from the DFE-02 at 22Amp to the DFE-26 at 195Amp

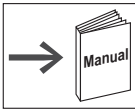

Further information available from the Fairford website www.fairford.co.uk

Dimensions – Abmessungen – Dimensioni – Dimensiones

DFE-30 to DFE-38 132kW to 280kW

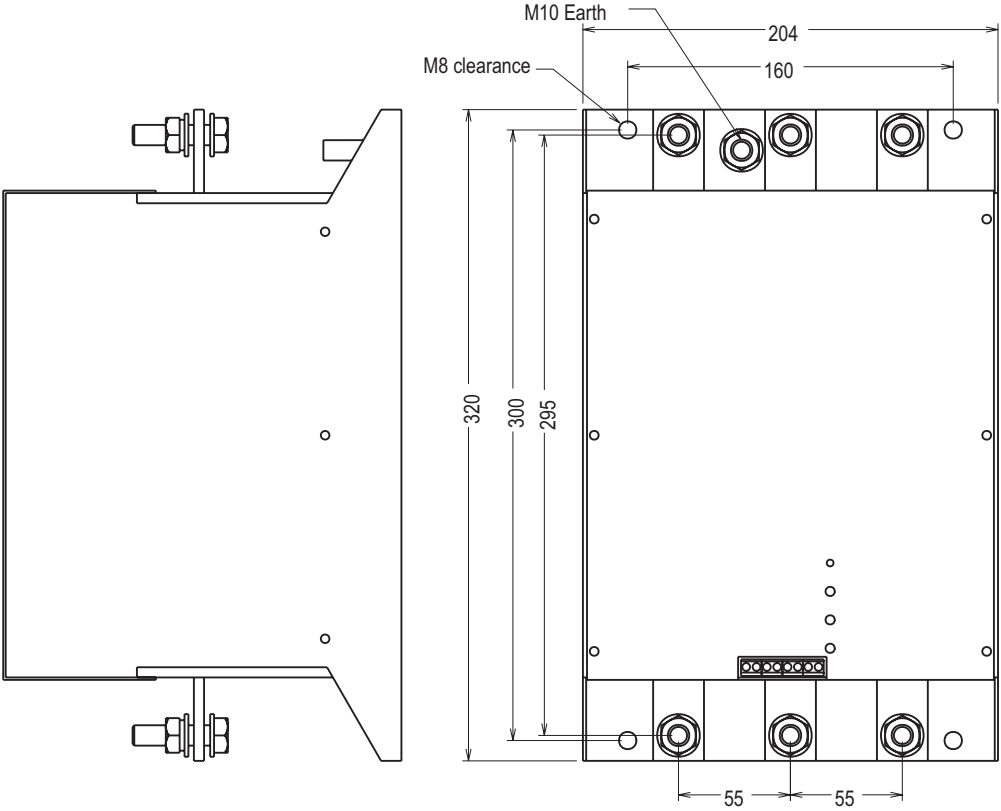

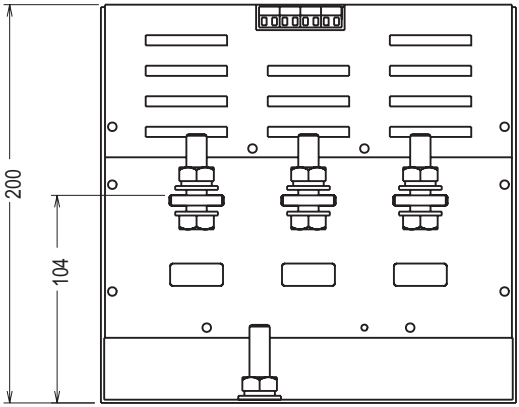

Unit weights
DFE30 & DFE32 9.7kg / 21.4Lb
DFE34 to DFE38 13.5kg / 29.8Lb

All Electrical connections are M10

Unit mountings suitable for M8 fixings.
160mm x 300mm centres
6.3in x 11.8in centres

Power cables/Leistungsleitungen/Conducteurs de puissance/Cavi di potenza/ Conductores de potencia

Cu STR 75°C

1 L 1 , 3 L 2 , 5 L 3 (PE)
2 T 1 , 4 T 2 , 6 T 3

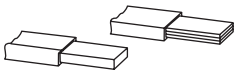

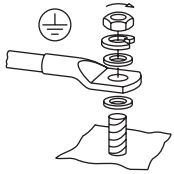

DFE-30 & DFE-32	2x 95mm^2 2x 2/0 AWG	25x 5	M10 - 14Nm 123.9 Lb.in	M10 - 14Nm 123.9 Lb.in
DFE-32 to DFE-38	2x 150mm^2 2x 350 kcmil	25x 10		

Kit installation with Insulation Kit part Number MIS855 is required for UL compliance

Mounting position - Einbaulage - Position de montage - Posizione di montaggio - Posición de montaje

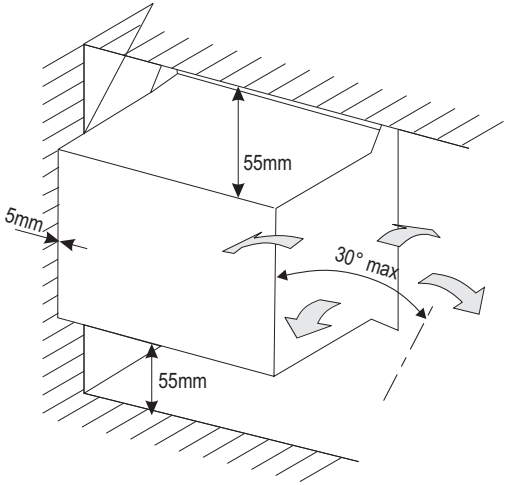

Control cables –Steuerleitungen Conducteurs de commande – Cavi comandi - Conductores de mando

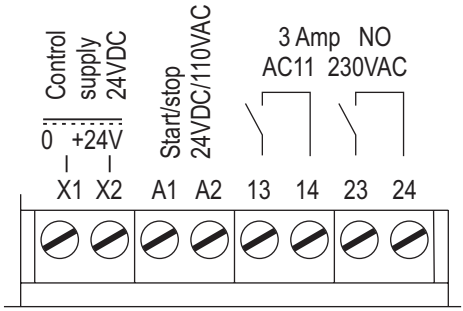

X1, X2 A1, A2
13, 14 23, 24

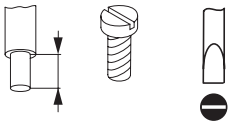

	mm^2	AWG	mm	Nm	mm
1 x	0.75 – 2.5	18 – 12	6	0.8	0.5 x 3.5
2 x	0.75 - 1	18 – 16	11	0.8	0.5 x 3.5

Standard connection – Standardanschluss – Raccordement standard – Collegamento standard – Conexión estándar

Soft starter with mains contactor - Softstarter mit Netzschütz – Démarreur progressif avec contacteur réseau – Softstarter con contattore di rete – Arrancador suave con contactor red

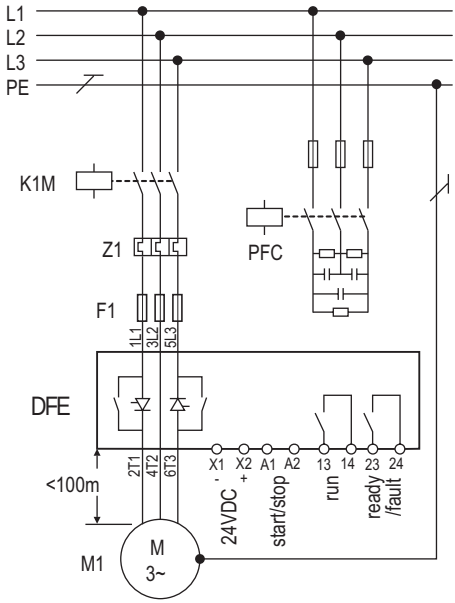

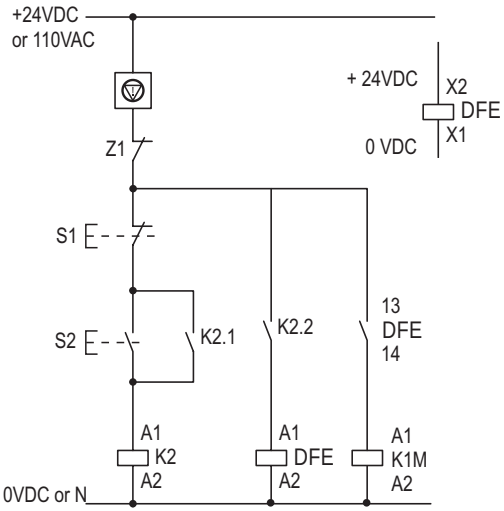

3 wire control 24 VDC/110VAC

Make the Delta at the motor

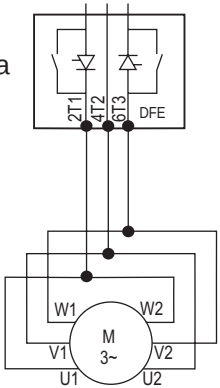

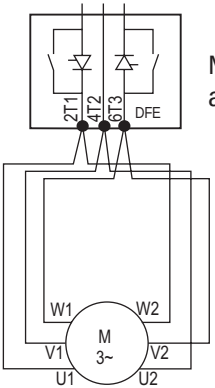

Make the Delta at the DFE

Where several conductors are to be connected, the difference between the wires/cables used must not exceed one DIN Standard size level.

Bei Mehrleiteranschluss darf maximal ein DIN-Normgrößen-Sprung zwischen den verwendeten Leitern liegen.

En cas de raccordement de plusieurs conducteurs, il faut 1 écartement normalisé max. entre les conducteurs.

In caso di collegamento a più conduttori, è ammesso al massimo un salto di grandezze DIN standard fra i conduttori utilizzati.

En caso de conexión de múltiples conductores puede haber como máximo un salto de magnitud normalizada DIN entre los conductores utilizados.

Semiconductor contactor – Halbleiterschütz – Contacteur à semi-conducteurs – Contattore a semiconduttori – Contactor semiconductor

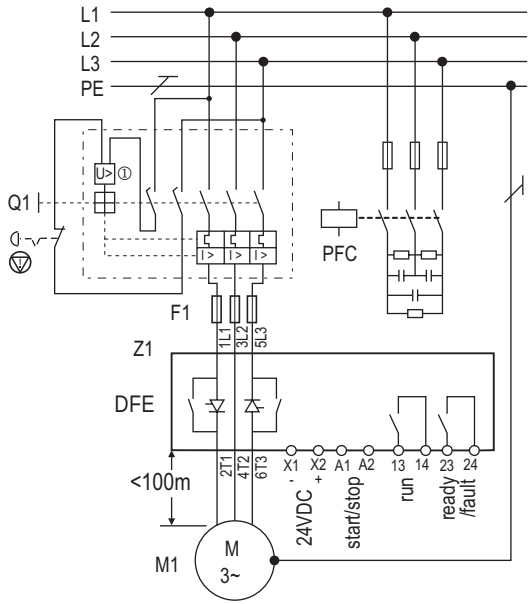

Undervoltage release with early-make auxiliary contact - Unterspannungsauslöser mit voreilendem Hilfsschalter - Déclencheur à manque de tension avec contact auxiliaire à action avancée - Sganciatore di minima tensione con contatto ausiliario anticipato - Disparador de baja tensión con interruptor auxiliar adelantado

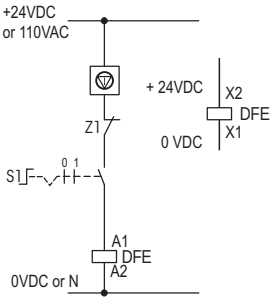

2 wire control element
24 Volt within cabinet,110 Volt external

Q1 = Cable protection - Leitungsschutz - Protezione di linea - Protección de cable - Protection de câbles

K1M = Main contactor - Netzschütz - Contattore di rete - Contactor red - Contacteur réseau

Z1 = Overload relay - Überlastrelais - Relè termico - Relé de sobrecarga - Relais thermique

F1 = Semiconductor fuse for type 1 coordination, in addition to Q1 - Halbleitersicherung für Zuordnungsart 1, zusätzlich zu Q1 - Per avere la protezione del semiconduttore in coordinamento di tipo 1, è necessario un fusibile in aggiunta a Q1 - Fusible semiconductor para tipo de coordinación 1, adicionalmente a Q1 - Fusible pour semi-conducteurs pour coordination de type 1, additionnel à Q1

DFE = Soft Starter - Halbleiterschütz - Contactor semiconductor - Contattore a semiconduttori - Contacteur à semi-conducteurs

A1-A2 = Start/Stop - Start/Stopp - Start/Stop - Arranque/Parada - Démarrage/Arrêt

= EMERGENCY-STOP - NOT-AUS - ARRESTO D'EMERGENZA - PARADA DE EMERGENCIA - ARRET D'URGENCE

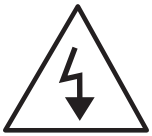

SERVICING

WARNING NEVER CARRY OUT ANY WORK ON ELECTRICAL OR MECHANICAL EQUIPMENT BEFORE ISOLATING ALL POWER SUPPLIES.THE DFE DOES NOT PROVIDE ISOLATION.
LIVE OUTPUTS MAY BE PRESENT WITHOUT MOTOR ROTATION

Settings - Einstellungen - Réglages - Regulazioni - Regulaciones

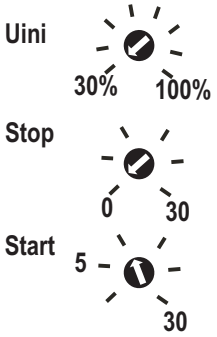

Pedestal Voltage:- 30% for standard rating
100% for high breakaway loads

Soft Stop time:- 0 = default range 0S to 30 S

Soft Start time:- ~12 = default range 1S to 30S

Green

On Ready
Off Fault

Flash Red (fault)

1 SCR / supply
2 Thermal
3 Uc < 24V
4 Bypass relay failure
5 Shearpin
6 Overload

Rapid Overcurrent

☺ **LED green - LED grün – DEL vert – LED verde - LED verde**

On Ready for operation – Betriebsbereit – Prêt à fonctionner – Pronto al funzionamento – En condiciones para funcionamiento
Off Fault – Fehler – erreur – errore – error

☹ **Fault LED red – Fehler LED rot – DEL erreur rouge – LED errore rosso –LED error rojo**

flashes
1 SCR or supply
2 Too hot
3 Control supply low volts
4 Bypass relay failure
5 Shearpin (I> 4.5 x Ie)
6 Overload - see chart on page 10

Green/Orange Flash Tripped & Reset, Ready
Rapid flashes Overcurrent. >300% starting, > 110% running

Following a trip the LED will continue to flash until until the next start is initiated.

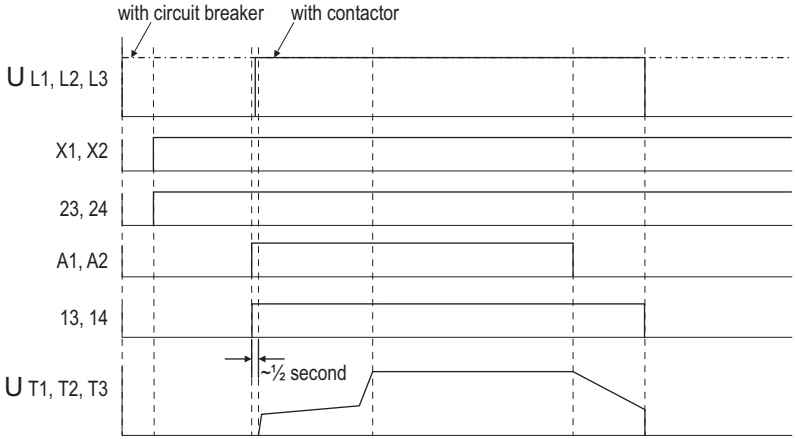

Rated Impulse withstand Voltage (Uimp)	4kV
Rated Insulation Voltage (Ui)	500V
Pollution Degree 2	For use in Pollution Degree 2 environment
Short Circuit Co-ordination*	Type 1
Surrounding Air Temperature	0°C to 40°C. Above 40°C de-rate linearly by 2% of unit FLC per °C to a derate of 40% at 60°C (not UL) - See requirements on page 12
Transport and Storage	-25°C to +60°C
Altitude	1000m. Above 1000m de-rate linearly by 1% of unit FLC per 100m to a max. altitude of 2000m.
Humidity	max. 85% non-condensing, not exceeding 50% at 40°C
IP Rating	IP00

Design Standards

IEC 60947-4-2;
EN60947-4-2 "AC Semiconductor Motor Controllers and Starters"
* When protected by recommended semiconductor fuse.
UL508 Industrial Control Equipment - only models DFE-30 and DFE-32 are UL listed.see UL requirements on page 12

EMC EMISSION AND IMMUNITY LEVELS		
ESD immunity	IEC 61000-4-2	4kV contact. 8kV air discharge
R F immunity	IEC 61000-4-6	140dBuV over 0.15-80MHz
R F immunity	EC 61000-4-3	10V/m over 80 -1000MHz
Fast Transient immunity	IEC 61000-4-4	2kV/5kHz
Surge immunity	IEC 61000-4-5	2kV line to ground 1kV line to line
Conducted RF emissions	EN 55011	Class A
Radiated RF emissions	EN 55011	Class A

Sizing Guide

The DFE is designed for general purpose applications and where a traditional Star / Delta is currently used, or would be considered to be appropriate. Generally the motor will start off load, and the time to accelerate to full speed will be in the region of a few seconds.
The standard DFE range is suitable for the majority of cases, and conforms to Trip Class5, which means it is capable of withstanding 3 times Full Load Current for 5 second starts. However there are instances where a different start is required and to satisfy this situation the DFE has four further ratings, Class 10B, Class 10, Class 20 and Class30. These ratings correspond to IEC thermal / electronic overload trip classes, and the DFE must be used with an over current protection device that has a rating corresponding to the Trip Class selected.
When using the following tables to select the most appropriate model of DFE please note

- **The DFE is not suitable for very high inertia loads such as centrifuges or loaded crushers with starts > 30 seconds (Fairford has other ranges of Soft Starter for these applications)**

- **Do not use the Class 5 rating when there is possibility of the motor starting with a significant load.**

- **2-pole motors may take longer to start, use a minimum of Trip Class 10B.**

Attention!

Within the scope of the EU Directives, the DFE soft starters and their accessories may be commissioned only provided it is established that the machine fulfils the protective requirements of Machine Directive 89/392/EWG.

Achtung!

Im Geltungsbereich der EG-Richtlinien dürfen die Softstarter der Reihe DFE und deren Zubehör nur dann in Betrieb genommen werden, wenn festgestellt wird, dass die Maschine die Schutzanforderungen der Maschinenrichtlinie 89/392/EWG erfüllt.

¡Atención!

En el campo de aplicación de la normativa CE, los arrancadores suaves de la serie DFE y sus correspondientes accesorios sólo deberán ponerse en marcha cuando se asegure que la máquina cumple con las exigencias de seguridad de la normativa de máquinas 89/392/CE.

Attention !

En application des directives européennes, les démarreurs progressifs de la gamme DFE et leurs accessoires ne doivent être mis en service que s'il a été vérifié que la machine répond bien aux exigences de la directive machines 89/392/EWG.

Attenzione!

Nel campo di validità delle direttive CEE i softstarter della serie DFE e i loro accessori possono essere messi in esercizio solamente se è verificato che la macchina soddisfai requisiti di sicurezza delle direttive macchine 89/392/CEE.

Common applications, used as a guide to determine appropriate Trip Class.

Application	Trip Class	Start Time (s)	Notes
Standard	5	5	Suitable for Star / Delta applications with < 5 s Star time, motor starts off load
Heavy	10B	12	Suitable for Star / Delta with applications < 12 s Star time
High Torque	20	12	Requires more starting torque than a Star / Delta
Centrifugal Pump	10	10	Generally easy to start when pumping water
Positive displacement Pump	10	12	Can be difficult to start
Off load Conveyor	5	5	Unloaded at start
Heavy conveyor	20	12	Loaded at start
High inertia fan	10	23	Generally fans greater or equal to 45KW
Off load Compressor	5	5	Special circuits ensure motor starts off load
Loaded Compressor	10	12	Some compressor systems can be difficult to start
Off load Mixer	5	5	No material in basin, off load
Heavy Mixer	20	12	Material in basin

Trip Class table

Ie (A) 400V	Inline KW 400V	Inline HP 460V
132 A	75 KW	100 HP
160 A	90 KW	125 HP
195 A	110 KW	150 HP
230 A	132 KW	150 HP
280 A	160 KW	200 HP
350 A	200 KW	250 HP
430 A	250 KW	350 HP
500 A	280 KW	400 HP

Trip Class 5 3-5: 355 (10/Hr) (Standard)	Trip Class 10B 3.5-12: 1188 (3/Hr)	Trip Class 10 3-23: 1177 (3/Hr)	Trip Class 20 4-19: 1181 (3/Hr)	Trip Class 30 4-29: 1171 (3/Hr)
DFE-22 *	DFE-26 *	DFE-26 *	DFE-30	DFE-32
DFE-24 *	DFE-30	DFE-30	DFE-32	DFE-34
DFE-26 *	DFE-30	DFE-32	DFE-34	DFE-36
DFE-30	DFE-32	DFE-34	DFE-36	DFE-38
DFE-32	DFE-34	DFE-36	DFE-38	----
DFE-34	DFE-38	DFE-38	----	----
DFE-36	----	----	----	----
DFE-38	----	----	----	----

* The basic guide for the DFE-24 and DFE-26 is available as part No.M-7A49-F.
For ratings covered by the shaded areas please contact Fairford Electronics

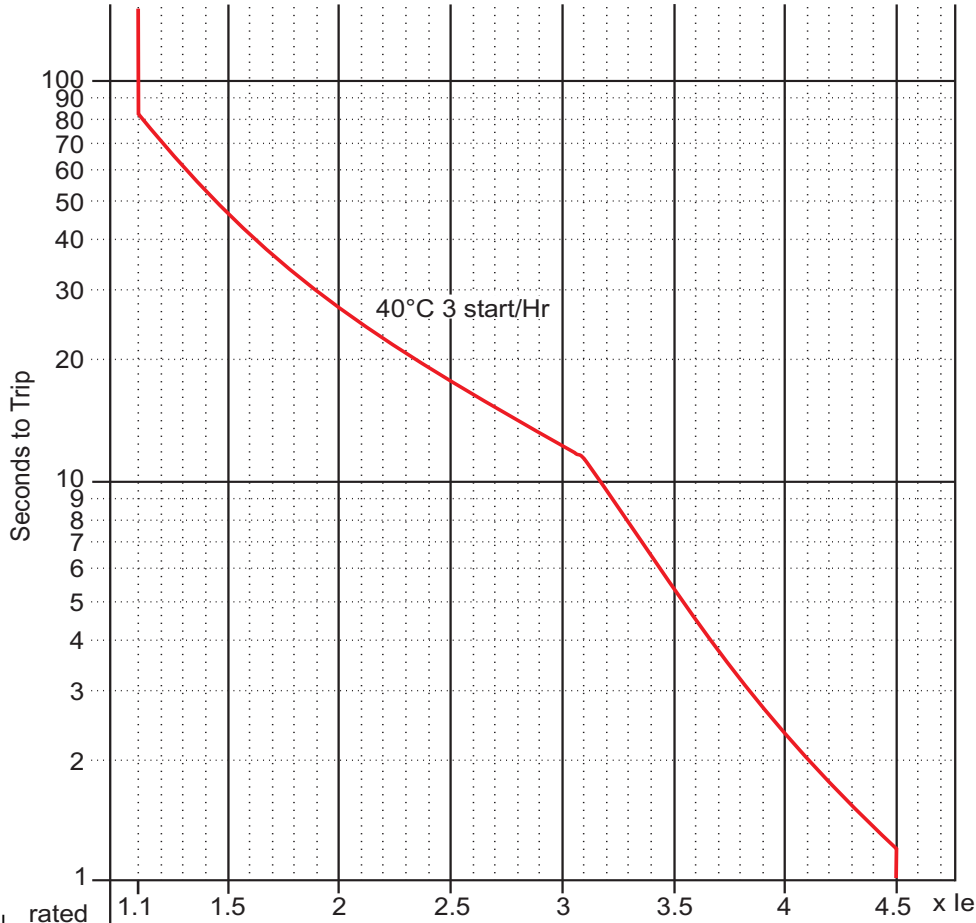

Model	rated current							
DFE-30	230A	253	345	460	575	690	805	920	1035
DFE-32	280A	308	420	560	700	840	980	1120	1260
DFE-34	350A	385	525	700	875	1050	1225	1400	1575
DFE-36	430A	473	645	860	1075	1290	1505	1720	1935
DFE-38	500A	550	750	1000	1250	1500	1750	2000	2250

Trip Level Current (Amps)

The DFE can be used at ratings other than those stated. Use the above trip curves to ascertain the required unit for the duty.

As an example the DFE-32 will run a 160kW motor (280 Amp) as the maximum continuous running current and will allow an overload of 3 x 280Amp (840 Amp) for 12 seconds 3 times per hour. The unit would also allow a 3.5 x overload (980 Amp) for approx 5½ seconds 3 times per hour.

Following an overload trip subsequent restarts can be restricted due to a cooling time. The severity of overload determines the cooling time which has a max value of 10 minutes.

Operational Voltage (Ue) 230-460 VAC rms 3-Phase (-15% +10%)
Rated Frequency 50 - 60Hz +/- 2Hz
Form Designation Form 1 Bypassed Controller
Index Rating Class 5 AC53b: 3-5: 355
Internally bypassed
Control Supply 24V DC supplied externally to terminals X1-X2.
Residual Ripple 100mV Spikes/Switching Peaks 240mV
Turn On/Off Response no overshoot of Vout
Over Voltage Protection Output voltage must be clamped to < 30V
DFE-30 to DFE-38 - approx 12VA per starter, must be capable of 4 Amps for 250ms.
Power supply for single starter available as part No. APSU006

Over Current Trip Single phase sensing, Non adjustable. See trip curve.
Start/Soft Stop Control 24V DC/110V AC galvanically isolated terminals A1-A2
Auxiliary Circuits (relays) Run - 13/14, Ready - 23/24. 230VAC 3A, AC11.
Indication Multi function LED on front panel
Start Time 1 to 30 seconds.
Stop Times 0 to 30 seconds
Start Duty S1 according to IEC 34-1 and VDE0530 Part 1.
3 x FLC for 5 seconds 10/Hr - standard rating (Class5, 40°C)
Up to 10 starts per hour. Soft stop = start for duty purposes
For other duties see pages 9 & 10 or consult
Fairford Electronics

Power Terminals
Input 1/L1, 3/L2 & 5/L3 output 2/T1, 4/T2 6/T3.
External busbars (unit is IP00)
Earth Terminal External stud M10

ModelName 400/460V Range	Class 10A @40°C 3x FLC for 12seconds 3 starts per Hr		Siba semiconductor Fuse for Type 1 coordination short circuit protection	Rated Short Circuit Current (Iq)
	Ie (Arms)	Motor kW at 400V		
DFE-30	230A	132kW	2062032.630	18kA
DFE-32	280A	160kW		18kA
DFE-34	350A	200kW	2063032.1000	18kA
DFE-36	430A	250kW		18kA
DFE-38	500A	280kW		18kA

UL ratings and protection requirements

Maximum surrounding air temperatures

Model 480V rated	Maximum 40°C		Maximum 50°C	
	Input current	Power	Input current	Power
DFE-30	241A	200hp	193A	150hp
DFE-32	280A	200hp	224A	150hp

Short circuit protection

Suitable for use on a circuit capable of delivering not more than the rms symmetrical amperes indicated below, 480 Volts maximum, when protected by fuses or circuit breakers, rated maximum amperes as indicated below.

Model	Short circuit rating	RK5 time delay fuse rated 600V ac
DFE-30	18kA	450A
DFE-32	18kA	450A

Fairford Electronics Limited,

Bristow House, Gillard Way, Lee Mill Industrial Estate, Ivybridge, Devon PL21 9GG, UK

TEL: + 44 (0) 1752 894554 FAX: + 44 (0) 1752 897145

EMAIL: sales@fairford.co.uk WEB: www.fairford.co.uk

Copyright © Fairford Electronics Ltd 2011